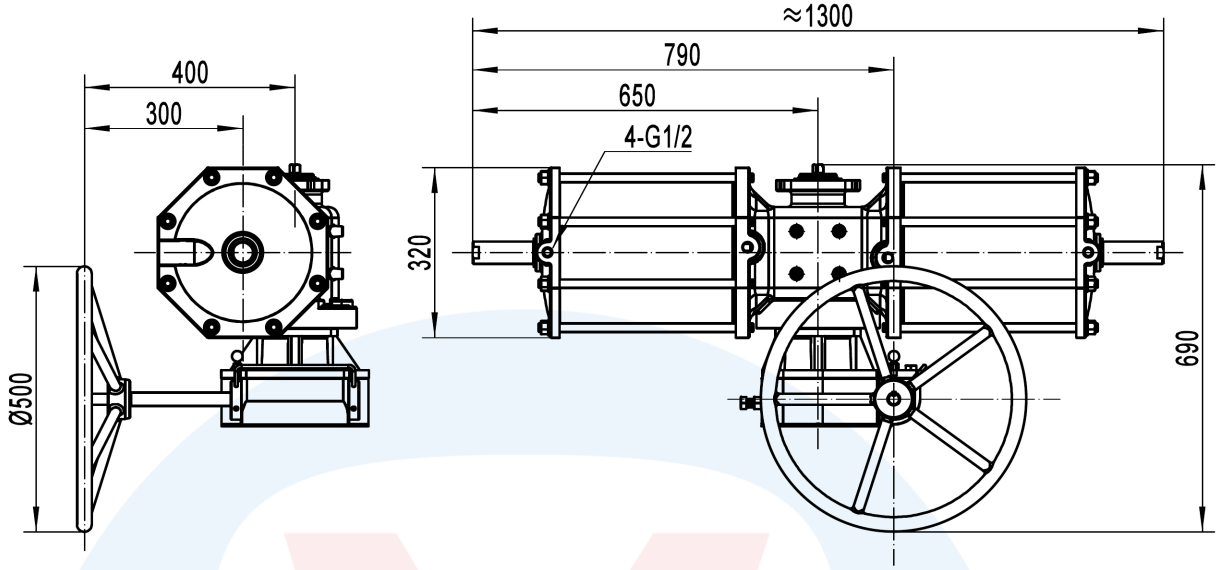

Connection Size

Connection size of bottom valve

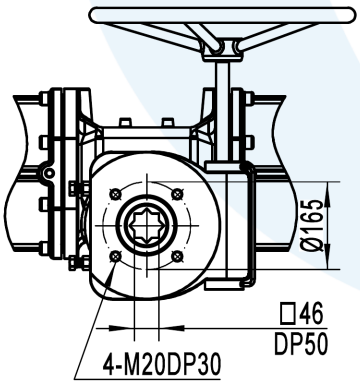

Top connection size

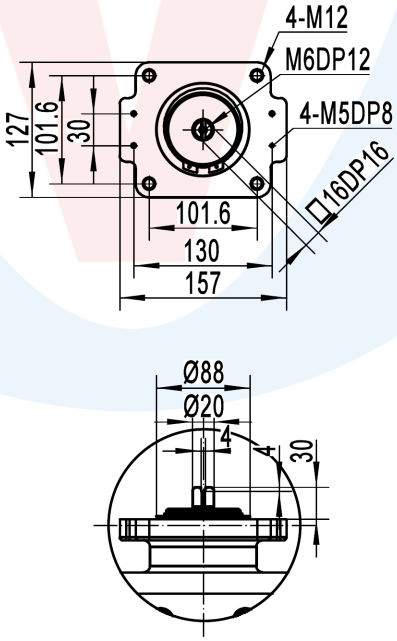

Side connection size

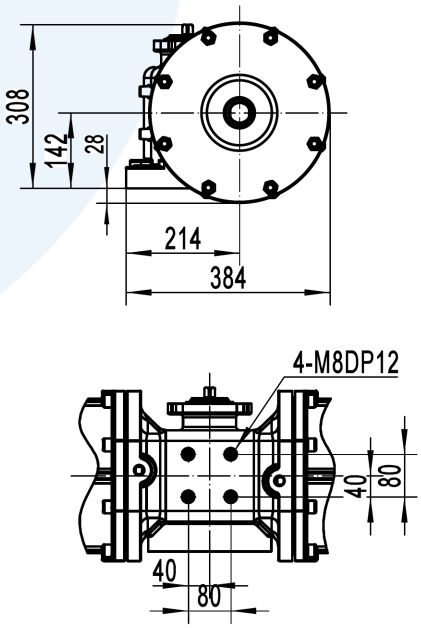

Borrowing document					
Old base map number					
Base map number					
Sign					
	Mark	Number	Change the file name	Sign	Date
Date	Design				
Archivist	Date				
			Date		

Dimensions

Sample marking				Weight	Example
Page count					

Zhejiang huaershi auto-control instrument valve co.,ltd

AW25+6#